ROYAL II WITH CLASSIC LADDER

(*Classic Ladder also compatible with Royal Entrance and Festiva steps)

Contents of Accessory box

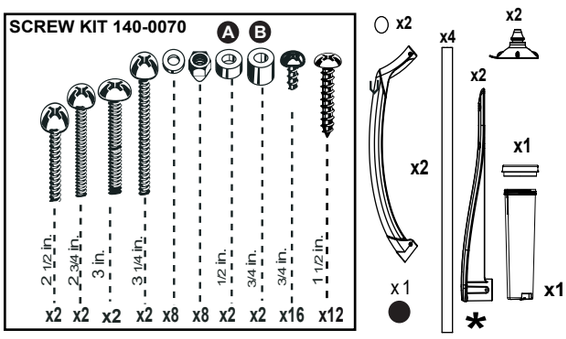

Contents of Ladder box SKU # 6007

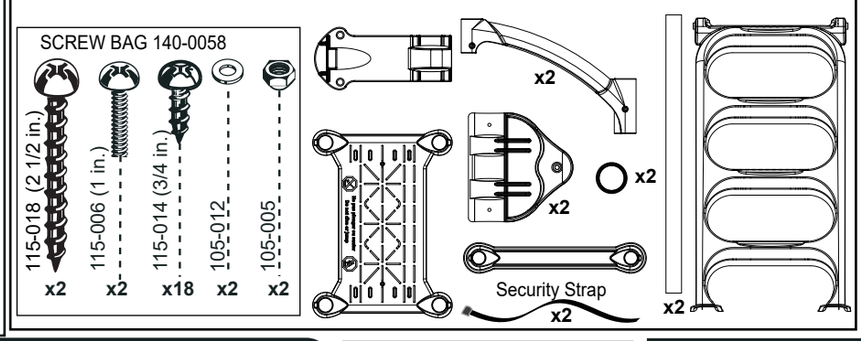

⚠ WARNING

- Do not jump nor dive from the step; you can be permanently injured.
- To prevent electrocution use only BATTERY operated tools to assemble the step.
- To prevent drowning or injuries, do not use the step outside the pool or to access a pool, and fasten the step firmly to the outside ladder.
- For 48,52,54''above-ground pool only.
- The step must be installed per manufacturer's instructions.
- Maximum capacity is 300 lbs / 135 kg.
- The outside ladder must be installed on a flat surface.

Tools required (not included)

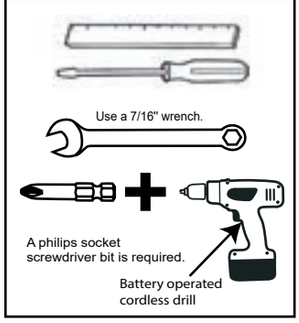

Royal II Step Shell

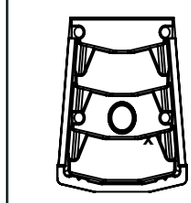

⚠ Caution

- Use of corrosive cleaning solutions can dammage the step components.
- Remove the step from water when temperatures drop below freezing.
- To prevent dammaging the step, never lift the step by its handrails.
- The manufacturer is not responsible for damages or injuries caused by improper installation or use of the product.
- Failing to install the Step Cup™ will greatly reduce the steadiness of the step and will void the manufacturer warranty.
- To prevent pool liner puncture, install the Step Cup™ provided.
- Damage caused by freezing or winterization is not under warranty.

A

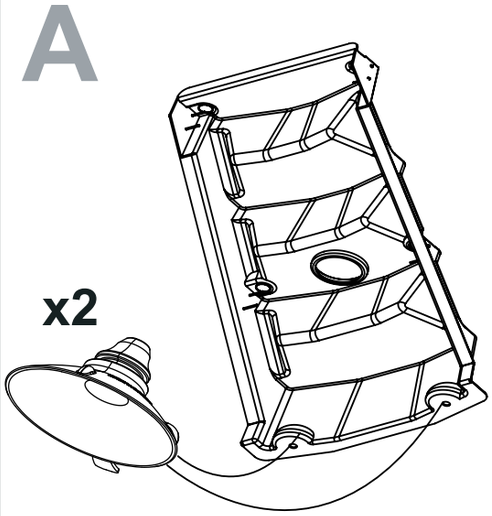

Insertion of Step Cup™ in the step.

With a flat screwdriver, compress the Step Cup™ mushroom ring while pushing it into the hole.
Twist the Step Cup™ to ensure that its mushroom has entirely cleared the wall thickness.

B1

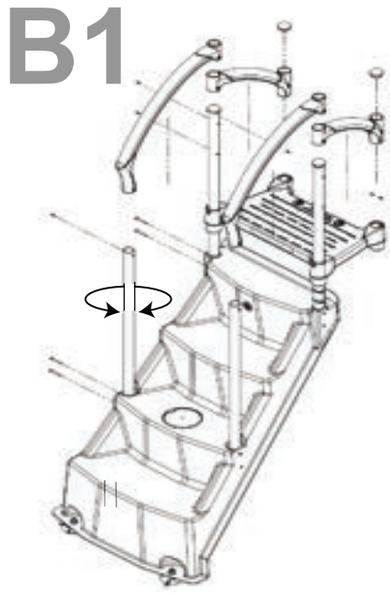

*Adjust by rotating each posts prior to fastening the handrails.

2) Assemble the bottom posts. Using a ruler, pick the bolts you need: two 2 1/2'' and two 3'' bolts. Use the two thin spacers, washers and nuts as per the schematic Bottom post, **DO NOT TIGHTEN, YET.**

TOP POST

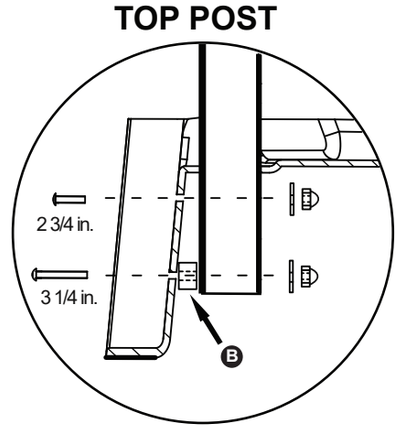

1) Begin the assembly with the two top posts. Using a ruler, pick the bolts you need: two 2 3/4'' and two 3 1/4'' bolts. Use the two tallest spacers and the washers and nuts as per the schematic Top post. Assemble the two top posts, **DO NOT TIGHTEN, YET.**

BOTTOM POST

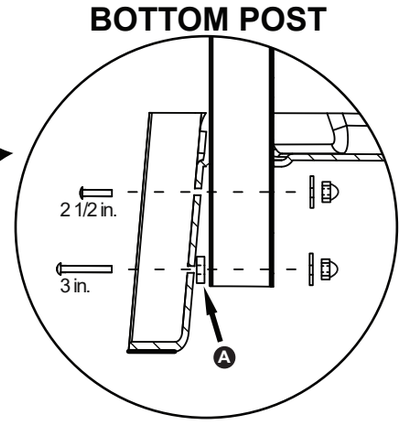

MANUFACTURER WARRANTY

1 year on pool step.
1 year on hardware.

2257 route 139
Drummondville, Québec
J2A 2G2
WWW.INNOVAPLAS.COM

ROYAL II WITH CLASSIC LADDER

B2

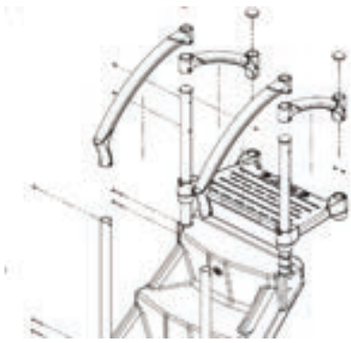

1) Install the four post covers.

2) Secure the 4 handrails to the posts using the screws provided. **DO NOT SECURE THE PLATFORM UNTIL STEP D2.**

C

1) Fill with sand or rock dust

2) Screw the lid in place and align the cover ribs with the holes in the ballast base.

3) Fasten the 4 screws trough the ballast base

4) Insert the entire step into the pool. Be careful not to damage the pool liner.

5) Drop the ballast in the step hole.

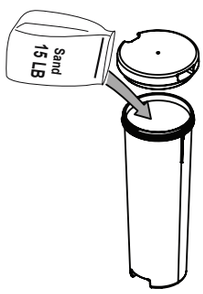

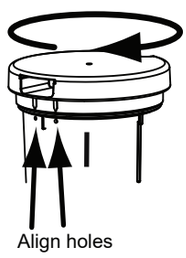

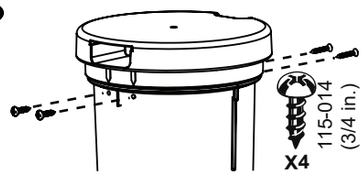

CAUTION

To prevent pool liner puncture keep a minimum of 1'' gap between the pool liner and the rear of the step.

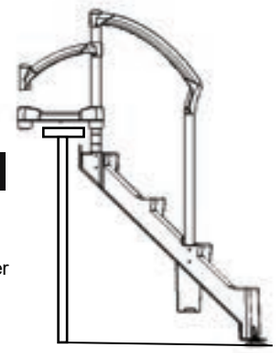

D1

1) Trace a line on each post at 39 inches from the ground for 48'' and 52'' pools. If you have a 54'' pool, trace a line at 40.5 inches from the ground.

2) Slide the pivot blocks onto the posts and line up with the traced marks. Secure with the screws provided.

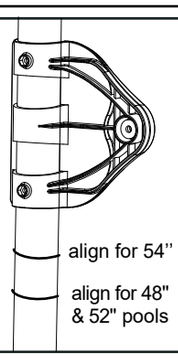

D2

1) Attach the ladder to the pivot blocks with the bolts, washers and nuts provided.

2) Attach the ladder base to the bottom of the posts with the screws provided.

3) Slide the plarform over the top of the posts. Do not secure yet. Slide lock over right post.

4) Insert the post covers into the handrails. Secure the two handrails to the posts as illustrated with the screws provided on both sides ofe the pool wall.

5) Once the platform is slid onto the four posts, secure it to the top seat (see illustration) using the two straps provided.

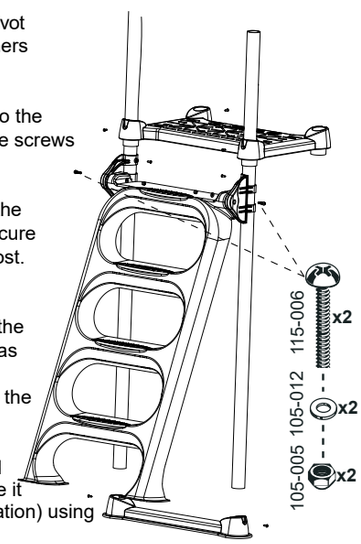

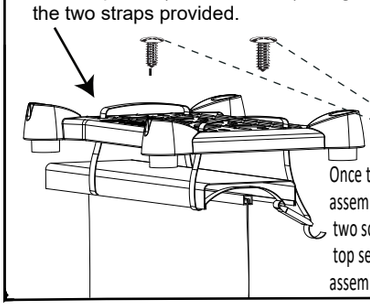

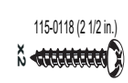

OPTIONAL:

Once the pool step has been completely assembled and secured to the pool, attach the two screws supplied through the platform to the top seat of your pool to provide a more rigid assembly.

D3

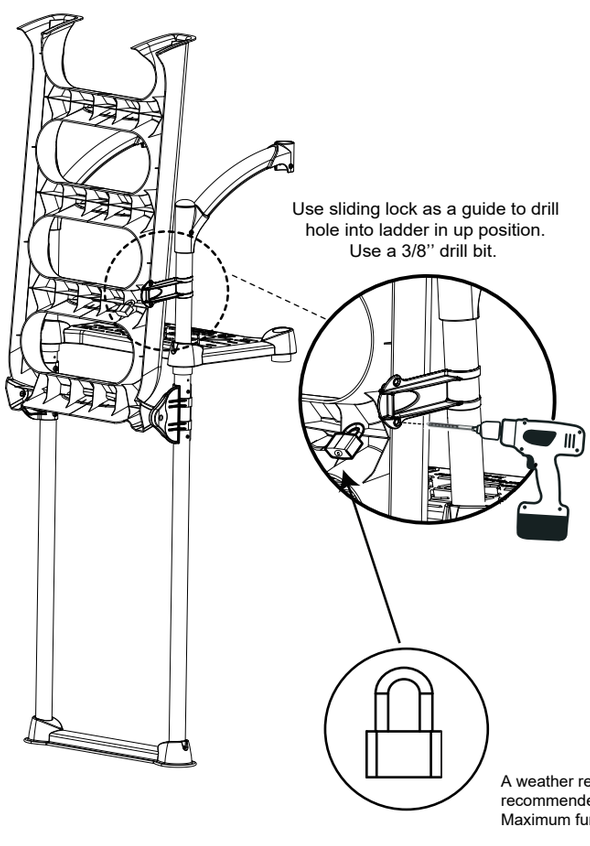

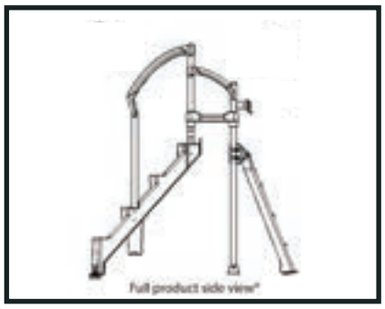

*Only use this item with deck-installed steps

MANUFACTURER WARRANTY

1 year on pool step.
1 year on hardware.

2257 route 139
Drummondville, Québec
J2A 2G2

WWW.INNOVAPLAS.COM